ANCO EQUIPMENT

Batch Pasteurizers

Serving the food, dairy, & beverage industry with strong, long-lasting equipment.



www.ancoequipment.com

Vat Batch Pasteurizers

Anco vat batch pasteurizers are available in a wide range of designs and sizes to suit diverse processing needs. These systems are commonly referred to as vat pasteurizers, milk pasteurization units, cook tanks, or processors—all of which are fundamentally stainless-steel jacketed vessels. When integrated with a boiler and chilling system, these versatile units can efficiently heat and cool a broad variety of food, dairy, beverage, and chemical products. While suitable for many applications, they are most frequently used in the dairy industry, particularly for milk pasteurization.



Batch Pasteurizer

These processing tanks are offered in many different styles, sizes and features customized for your application.

Standard Features:

- 304 Stainless Steel, No. 4 Finish
- Bottom Sweep Agitation and Side Baffle
- SEW Euro-Drive Gearmotor
- (4) Adjustable Ball Feet
- Thermowells for Product & Indicating Thermometer
- (2) CIP Spray Nozzles
- TC Ports for Air Space Heater, Air Space Thermometer
- 3" Air Vent and Product Inlet
- 2" Outlet

Additional Add-On Features:

- 316L Stainless Steel
- Full Scrape or Full Sweep Agitation
- High Speed Mixers
- Food-Grade Casters
- Stainless Ladder
- Variable Speed Drive (VSD)
- NEMA4 Stainless Chart Recorder Box



Dome Top



Wing Top



Open Top

Dome Top Batch Pasteurizer

Dome or Conical Tops are a popular option for tanks 200 gallons and larger. These tanks come standard with CIP (clean in place) spray-balls for easy cleaning and have many different agitation options. They are an affordable alternative to the High Temperature Short Time (HTST) Systems.

Standard Features:

- Euro-drive
- Wash-Down Motor
- Stainless Baffles
- Adjustable Ball Feet
- Anderson Thermowell
- 2" Valve Outlet
- Multiple Ports
- (2) Lifting Lugs
- (2) CIP Spray-Balls

Accessories:

- Anderson Chart Recorder
- Product & Air Space Thermometer
- Electric Air Space Heater & Controller
- Leak Detection Valve

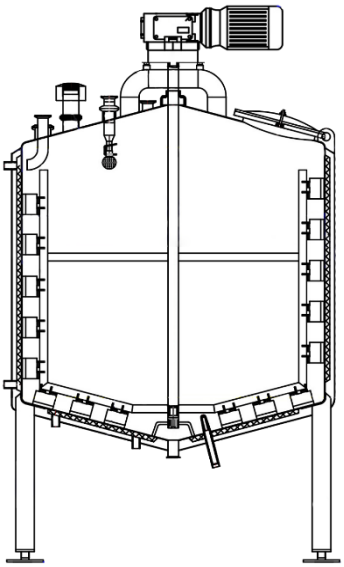

Side Scrape Agitation

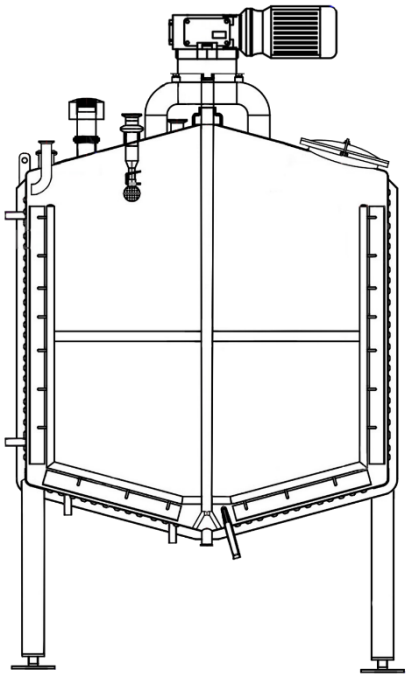

Full Sweep Agitation

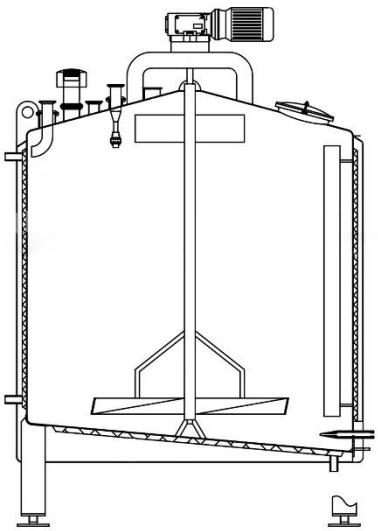

Bottom Sweep Agitation

Wing Top Batch Pasteurizer

The wing top lids with center bridge are available in 50 gallons and larger. These tops are great for observing your product after pasteurization or adding additional ingredients. The wing top is a favorite for yogurt & ice cream producers.

Standard Features:

- Euro-drive
- Wash-Down Motor
- Stainless Baffles
- Adjustable Ball Feet
- Anderson Thermowell
- 2" Valve Outlet
- Multiple Ports
- (2) Lifting Lugs
- (2) CIP Spray-Balls

Accessories:

- Anderson Chart Recorder
- Product & Air Space Thermometer
- Electric Air Space Heater & Controller
- Leak Detection Valve

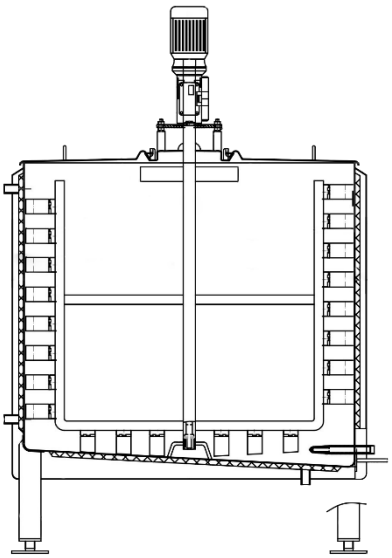

Side Scrape Agitation

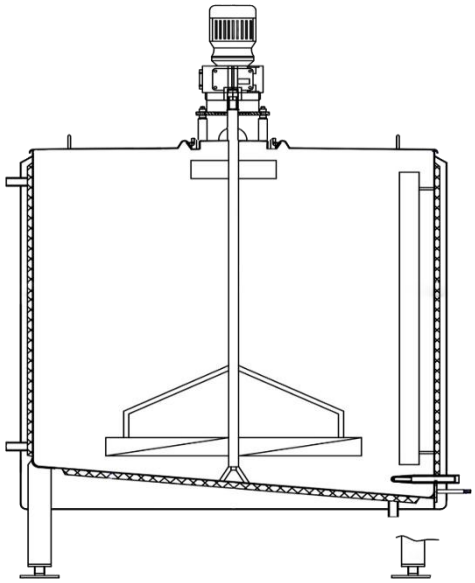

Bottom Sweep Agitation with Baffle

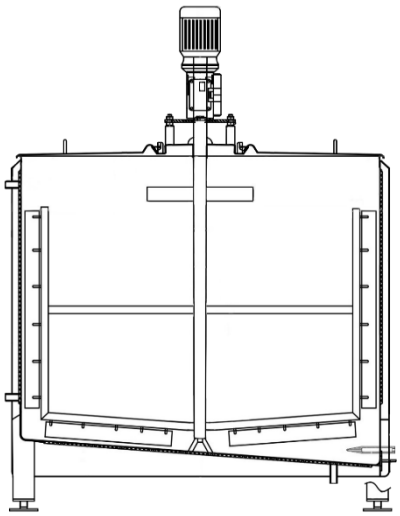

Standard Sweep Agitation

Open Top Batch Pasteurizer

The removable top option is popular feature for our pasteurizing cheese vats, available in tank sizes ranging from 50-300 gallons. The cover is a split-top design, and the agitator is fully removable. This configuration is specifically intended to facilitate cheese production directly in the vat following pasteurization

Standard Features:

- SEW Euro-drive
- Removable Agitation
- Adjustable Ball Feet
- 2" Valve Outlet
- Multiple Ports
- (2) CIP Spray Balls

Accessories:

- Anderson Chart Recorder
- Product & Air Space Thermometers
- Electric Air Space Heater & Controller
- Leak Detection Valve
- Whey Screen
- Curd Knives/Harp



Whey Screen



Fully Removeable Top

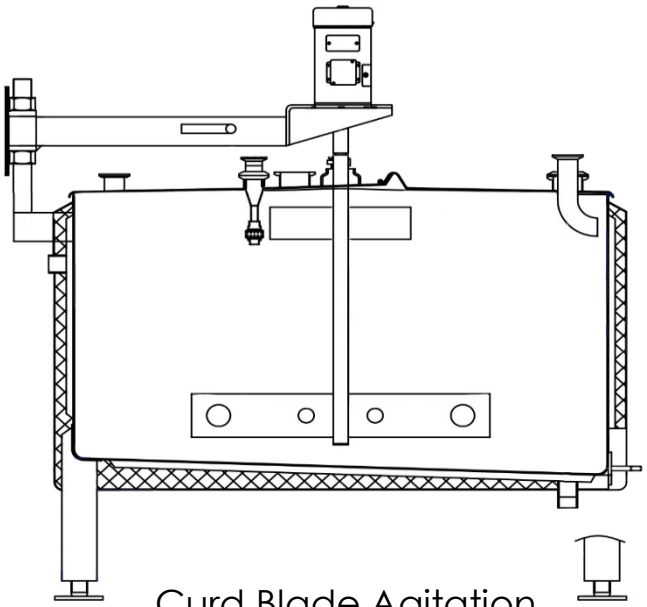

Curd Blade Agitation

Accessories for a Batch Pasteurizer

According to Pasteurizing Milk Ordinance (PMO) guidelines, there are a few additional accessories needed to insure you are delivering a safe product.



The Anderson AJ 311 package features a dual-pen circular chart recorder housed in a NEMA 4X washdown enclosure, suitable for wall or panel mounting. It includes two dual-element, all stainless-steel temperature probes: one dedicated to monitoring air-space temperature and the other for accurate product temperature measurement.



Anco Electric Air Space Heater consists of a stainless-steel heating element that is controlled by a NEMA4 rheostat. The element connects to a 3" tri-clamp port on top of a pasteurizer. The stainless paddles welded the top of the agitator shaft moves the heated air to reach it's required temperature. The element can be cleaned by CIP spray balls or removed and cleaned manually.



Leak Detect Valve: A stainless-steel plug valve specifically designed to prevent raw milk from re-entering the pasteurized batch. If the valve is improperly closed or becomes defective, it will allow milk to drip from the bottom of the valve, providing a visible indication of failure. This valve is required for all legally compliant batch pasteurization systems.



Contact us !

Email: info@ancoequipment.com

Phone: (920) 569-3530

Mailing Address:

1070 East Glenbrook Drive

Pulaski, Wisconsin 54162

www.ancoequipment.com